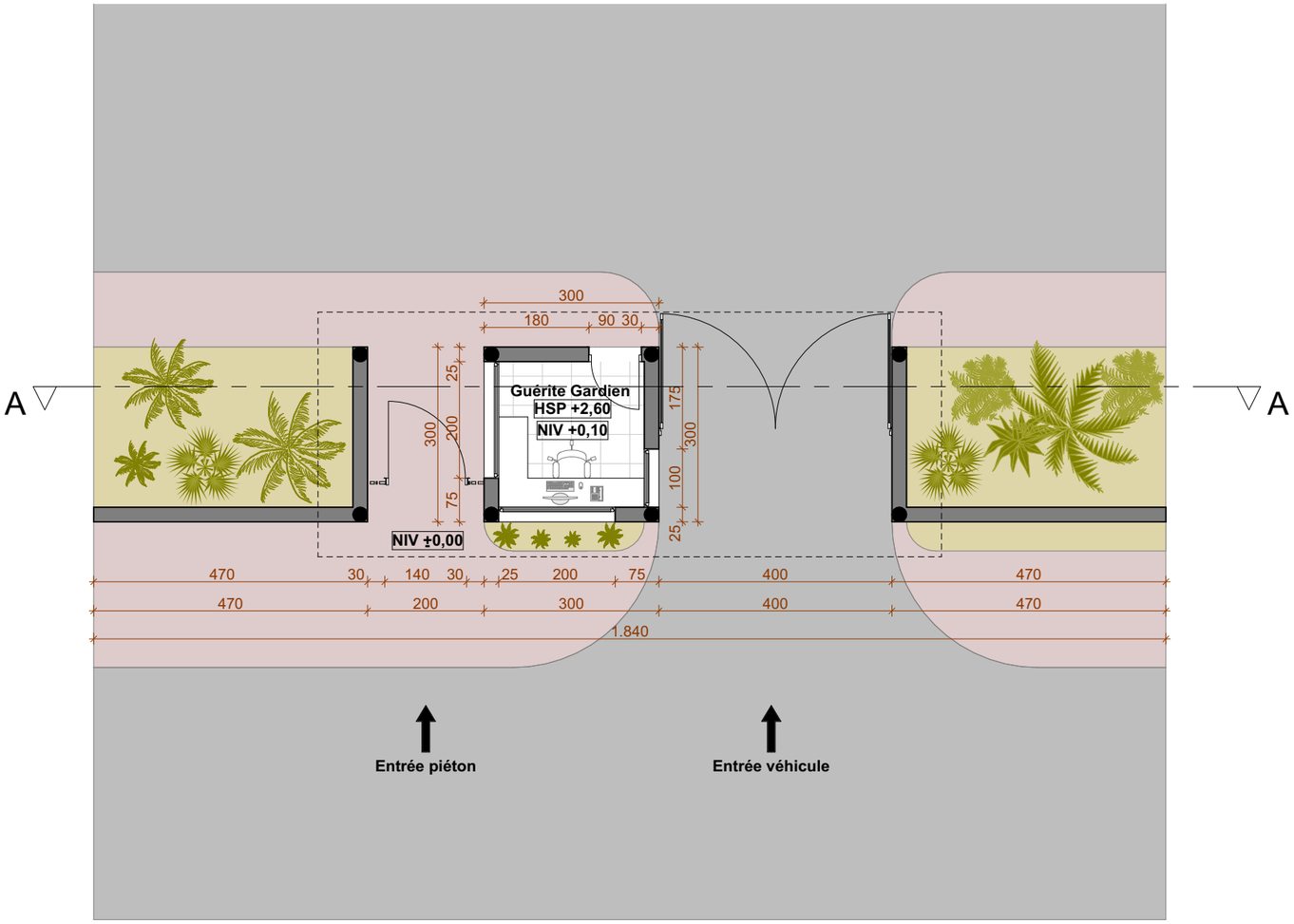

REZ-DE-CHAUSSEE

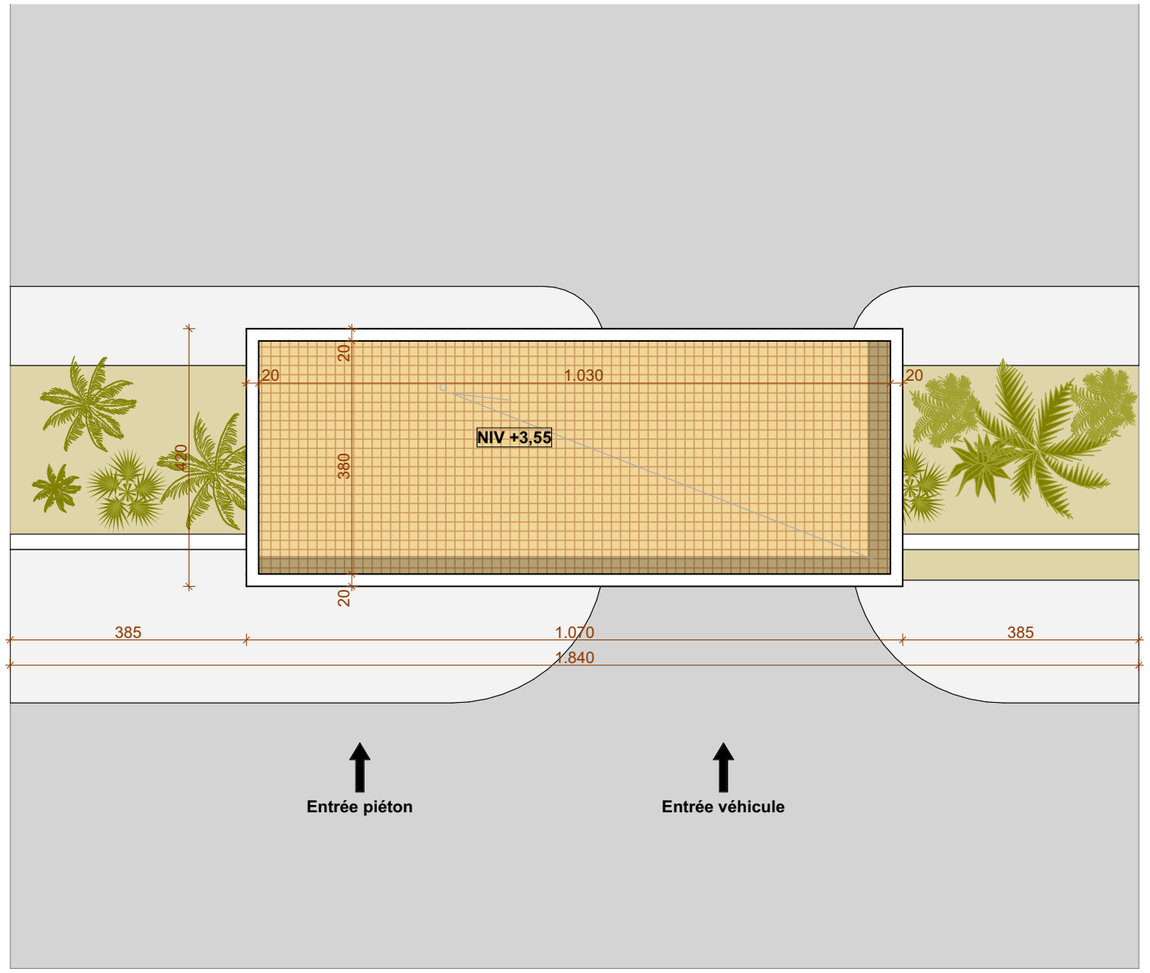

TERRASSE

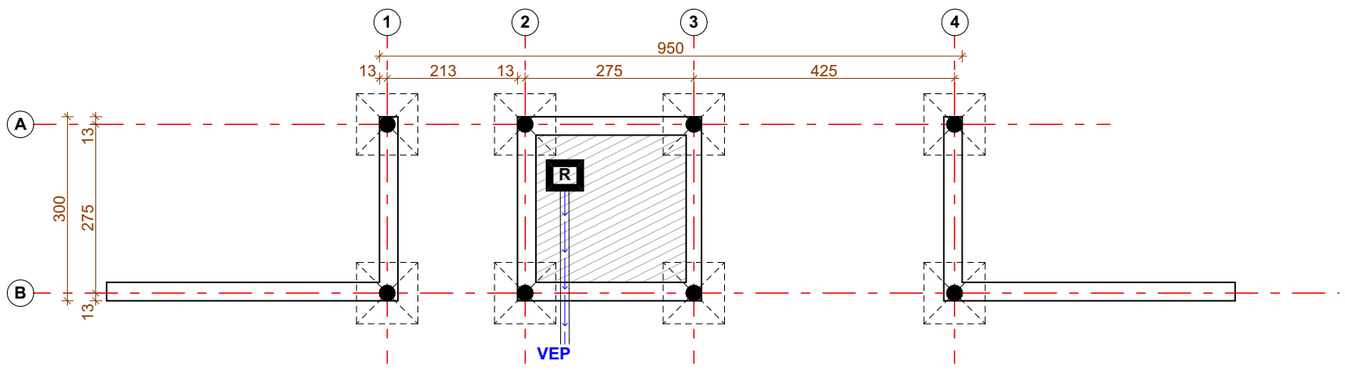

FONDATIONS

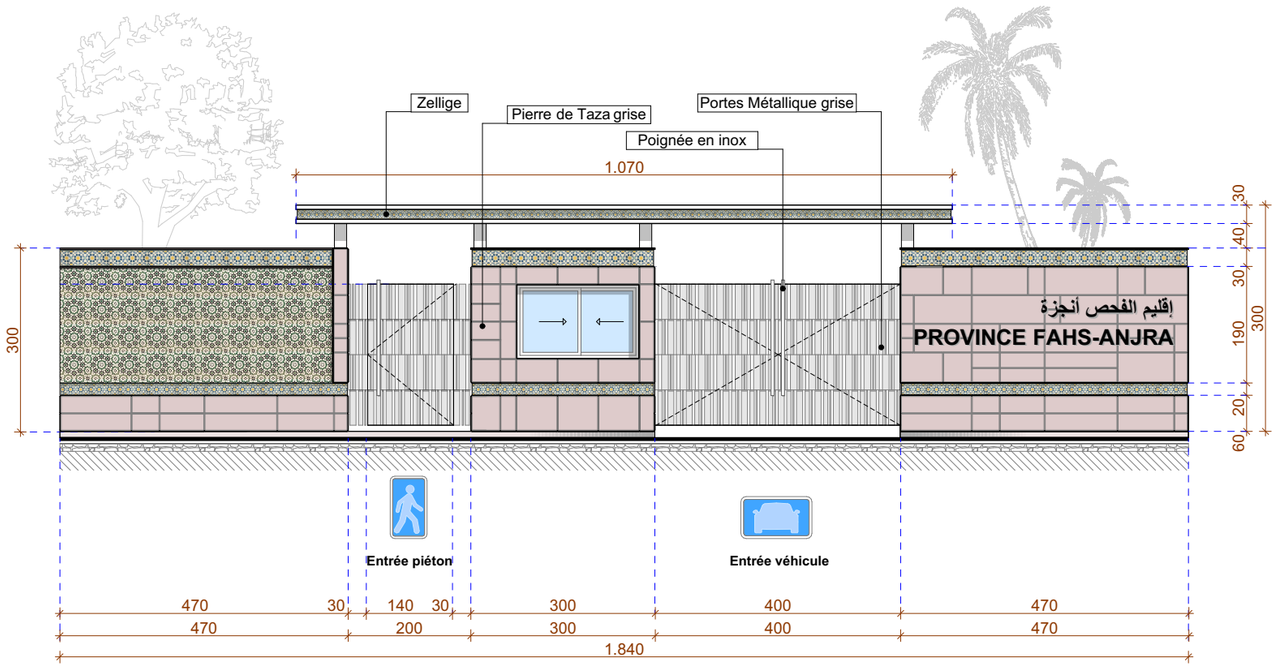

FACADE PRINCIPALE

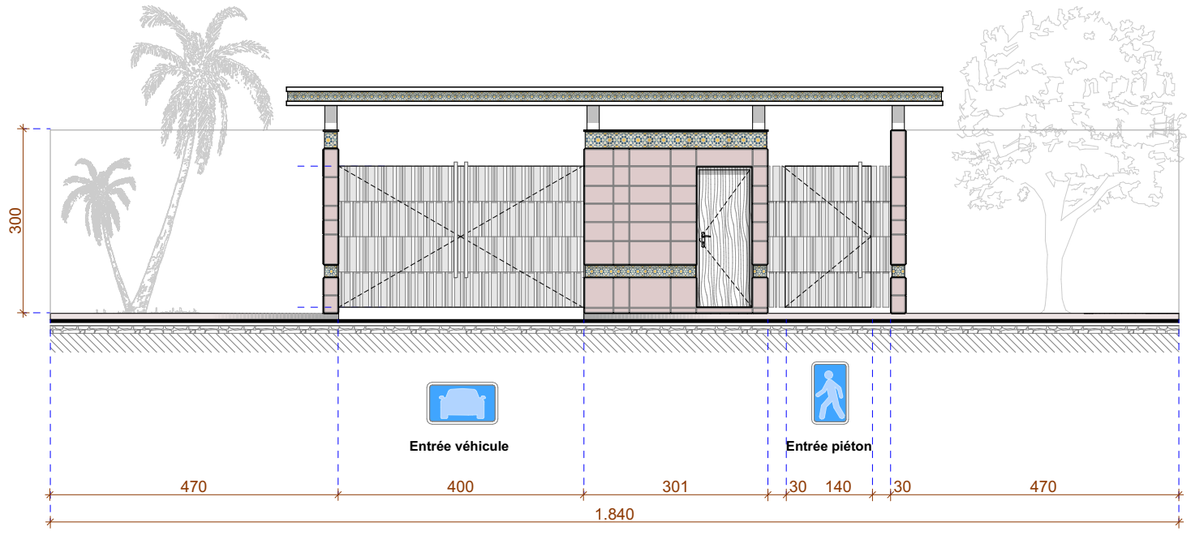

FACADE ARRIERE



IMADE DE SYNTHESE

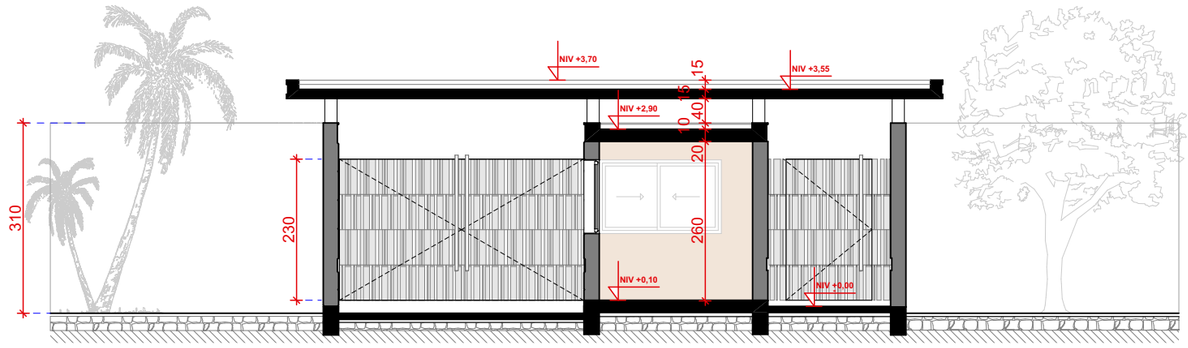

COUPE -AA- / DETAIL GUERITE